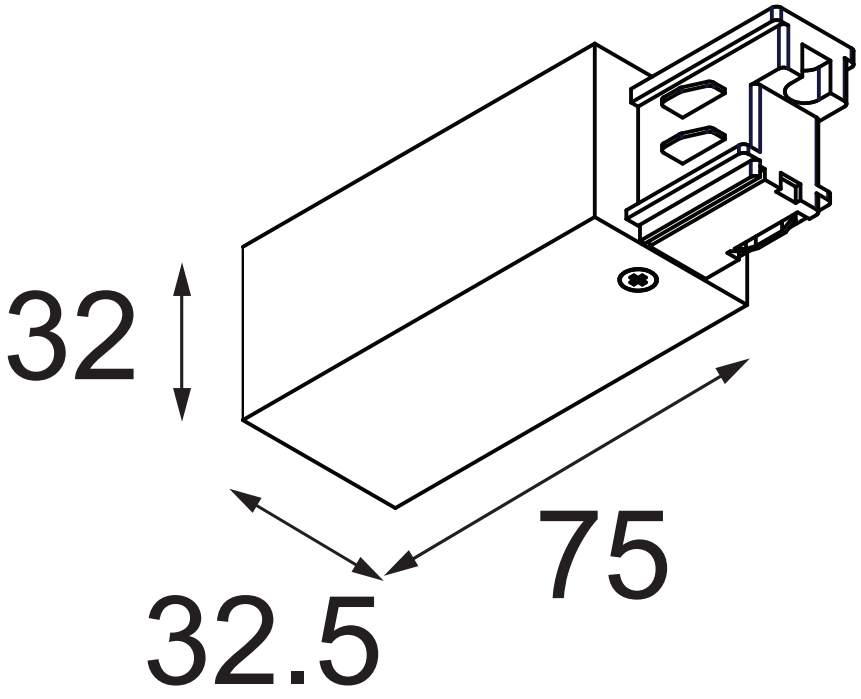
32
75
32.5