Marbul suspension adjustable track LED Casambi GI

135026XX-B1_135027XX-B1_135028XX-B1

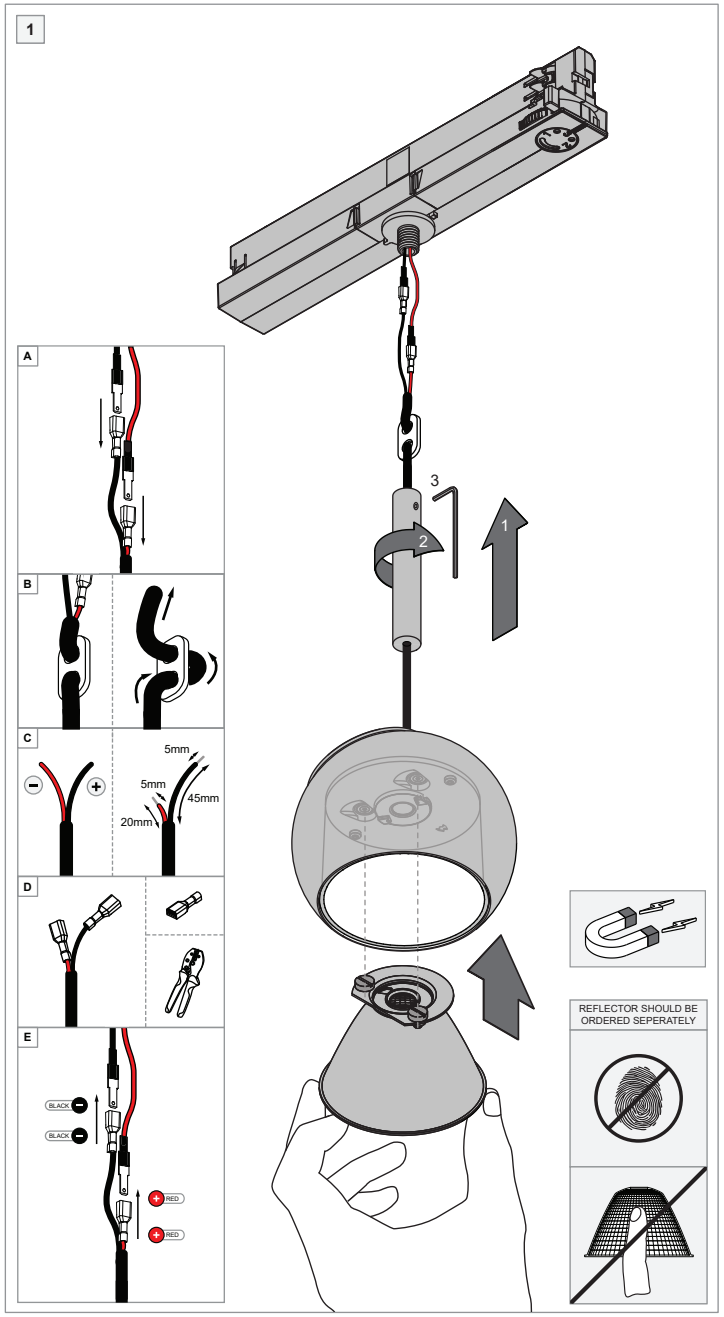

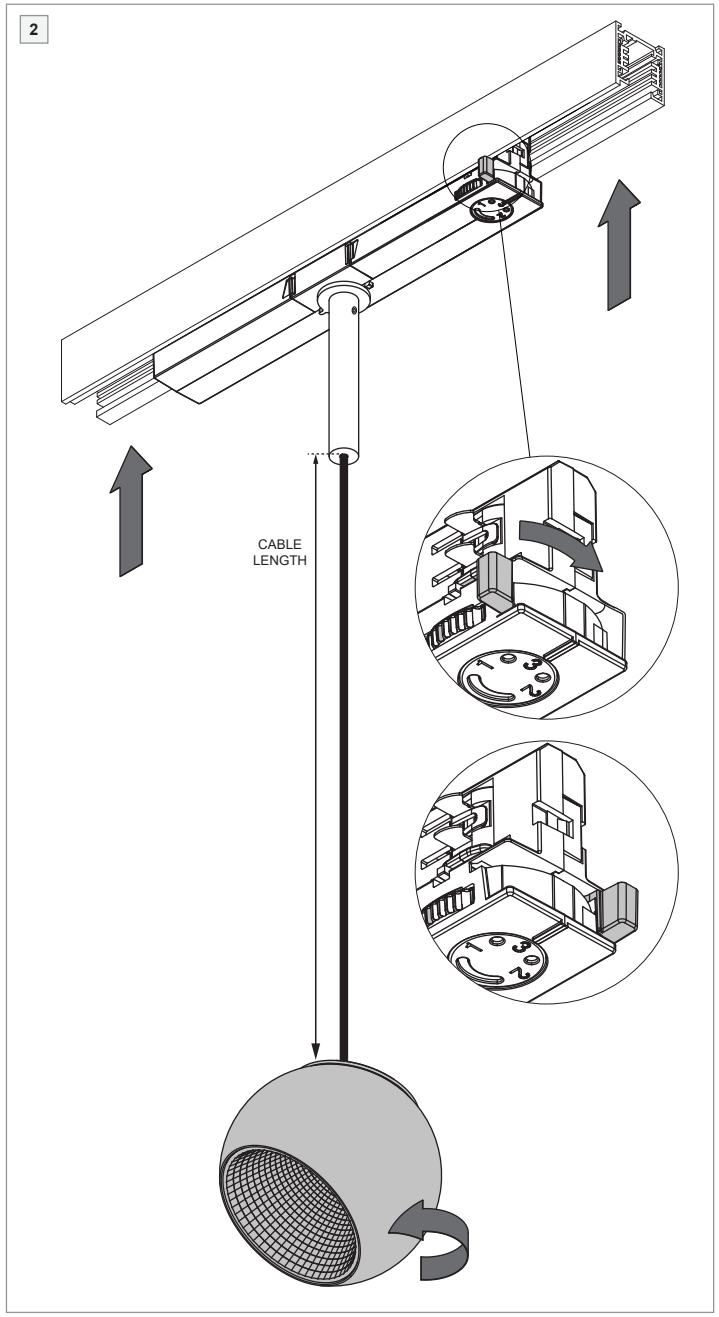

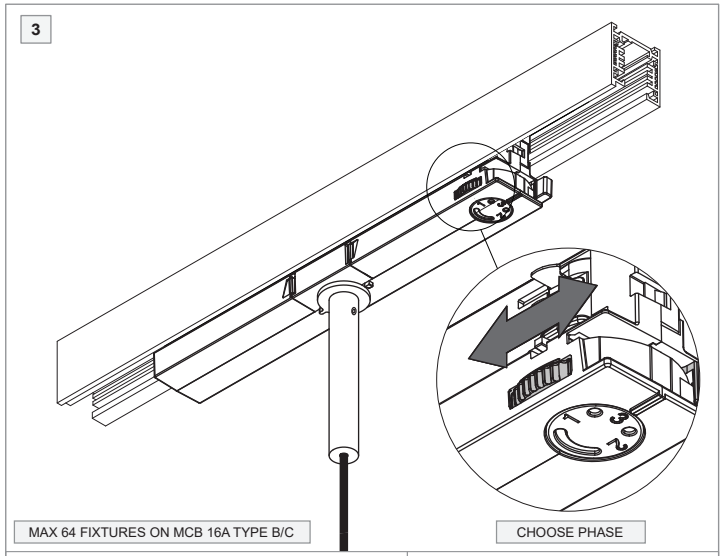

CASAMBI

www.casambi.com

Connect fixture to a Casambi network by using the Casambi App which can be downloaded from iOS App Store or Google Play Store.

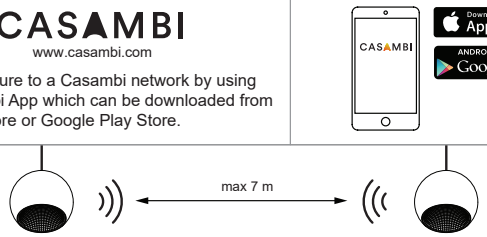

Surrounding materials , obstructions (walls, concrete, metal,...) and other wireless signals can have a negative influence on the casambi wireless signal range. Always check on site circumstances for optimal signal quality.

COMBINE WITH MODULAR 230V TRACK COMPONENTS

Consult Modular Lighting Instruments website or catalogue for overview track components.
Fixture is also compatible with following track systems

Eutrac	25-XX-XX / 26-XX-XX	Nordic Aluminium	Global Trac Pro XTS 4xxx	Fosnova	OMNITRACK
iGuzzini	6771-6774	Nordic Aluminium	Global Trac Pro XTSF 4xxx	Stucchi	ONETRACK
iGuzzini	6779-6782	Zumtobel	S280...	Powergear	PRO-0610
Ivela	7501 / 7511 / 7512	Erco	783...	Unipro	T32W
Lumisys Unipro	T32 / T33 /34	Side	25101	Unipro	T32FW
Lumisys Unipro	T32F / T33F /34F	Philips	RCS350 3C		

LIGHT SOURCE - DO NOT TOUCH LED

Touching the LED can result in permanent damage of the light source.The light source contained in this luminaire shall only be replaced by the manufacturer or his service agent or a similar qualified person.

PREVENTING ELECTROSTATIC DAMAGE

A discharge of static electricity may damage sensitive components. Therefore do not touch the LED nor the stripped parts of the wires with bare hands. Always be properly insulated by using ESD gloves.

01 - 11/07/2023