PISTA TRACK 48V Flange

134191XX_134192XX_134193XX

PISTA COMPONENTS

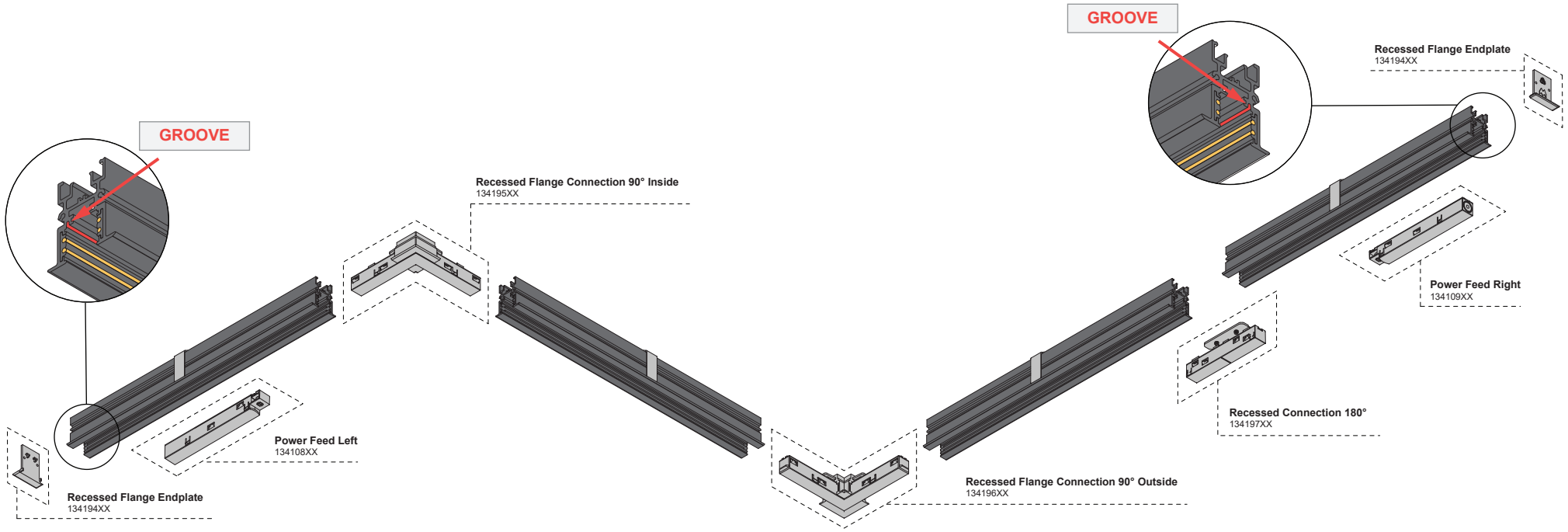

ELECTRICAL & DIMENSIONS

WARNING
GROOVE should always be on same side.
Check Power Feed manual

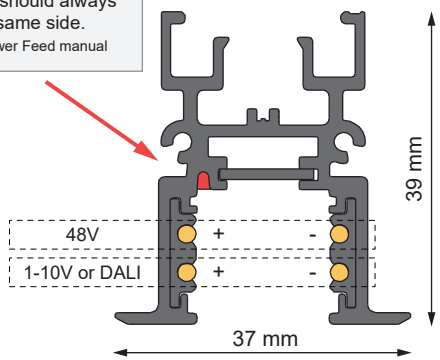

SHORTEN PROFILE

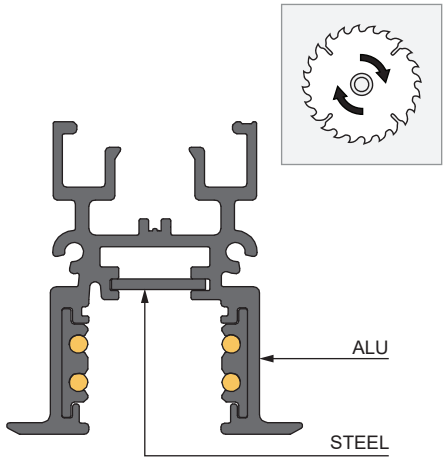

INSTALLATION DIMENSIONS

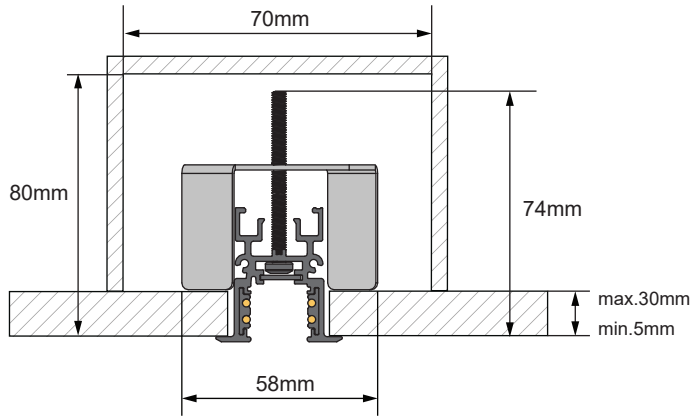

02 - 05/02/2020

48V III 1-10V DALI IP 20