Sulfer Uplight LED Tre Dim GI

132723XX_132724XX_132725XX

1

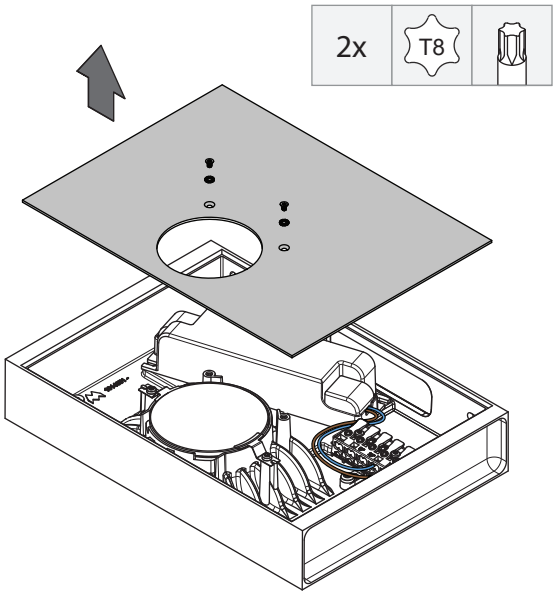

2

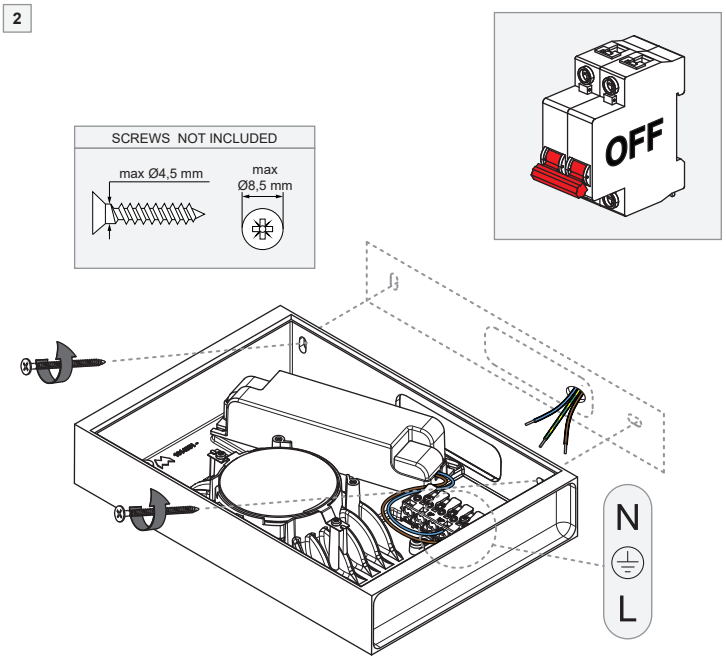

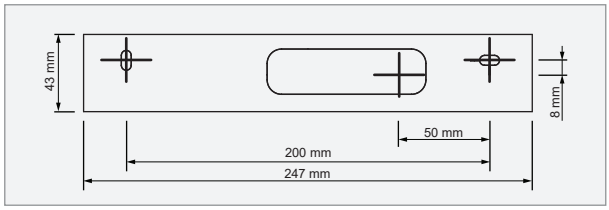

3

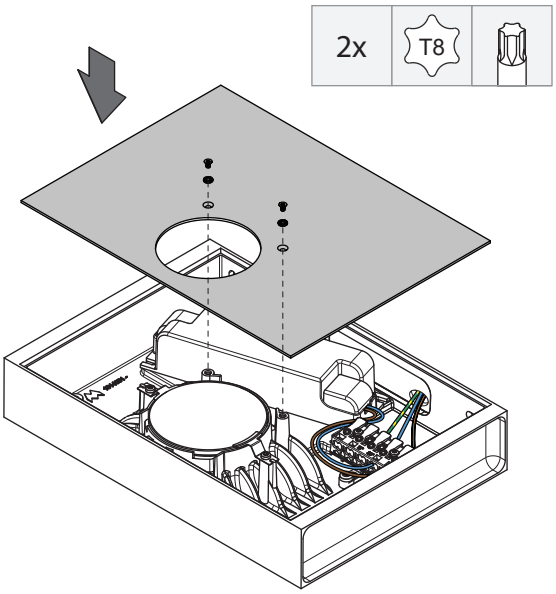

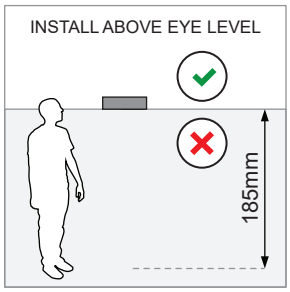

4

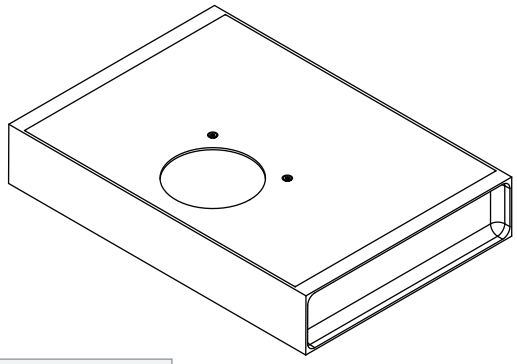

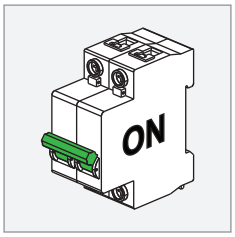

LIGHT SOURCE - DO NOT TOUCH LED

Touching the LED can result in permanent damage of the light source.The light source contained in this luminaire shall only be replaced by the manufacturer or his service agent or a similar qualified person.

Replace protective shield when broken. The luminaire shall only be used complete with its protective shield.
Reference number: 1009214.

04 - 01/07/2024