SmartST Wall 48 2xLED GE

129011XX

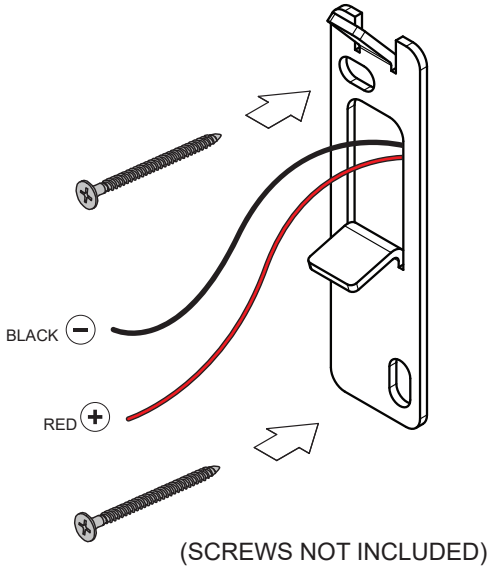

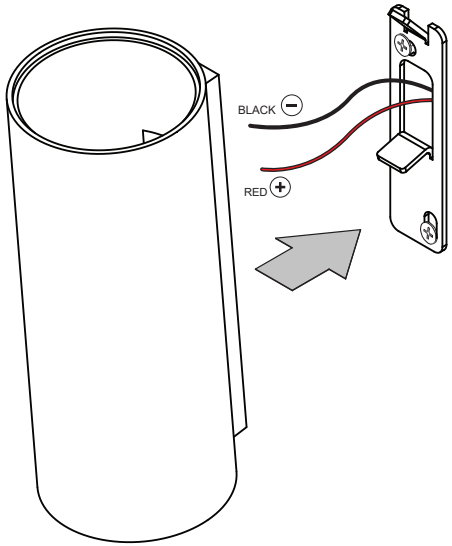

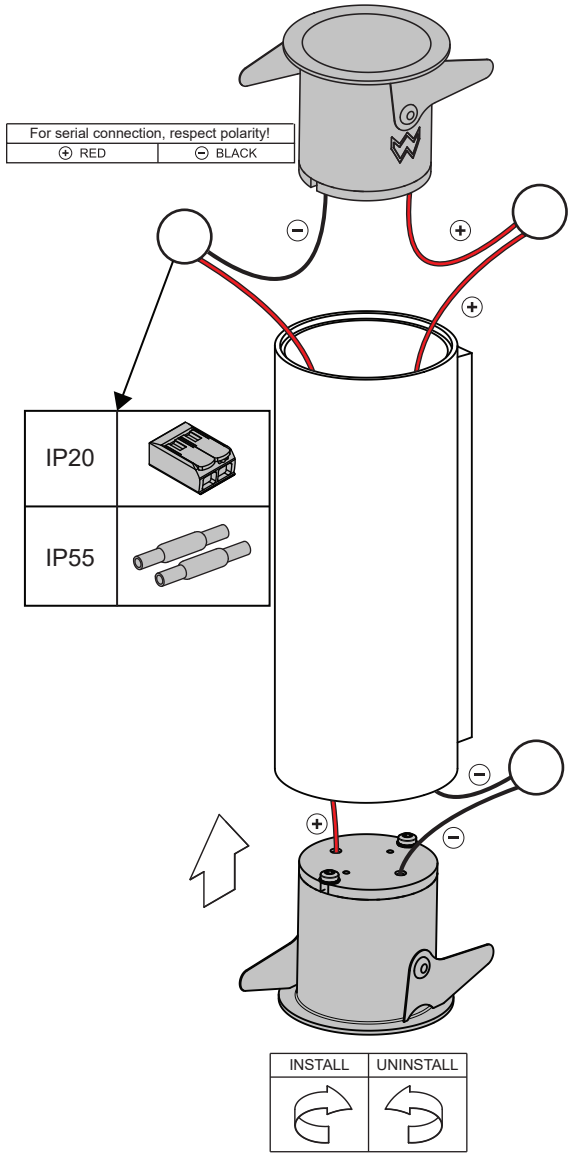

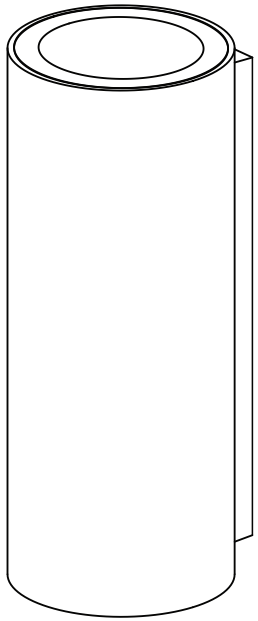

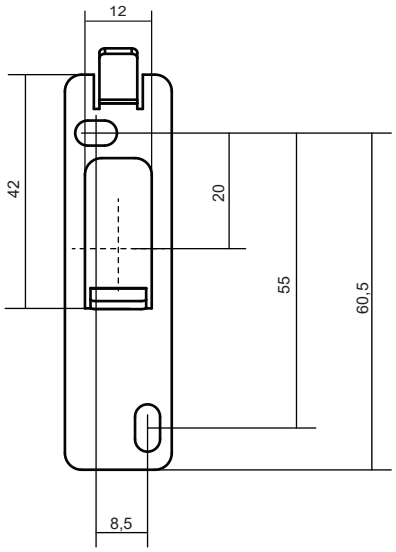

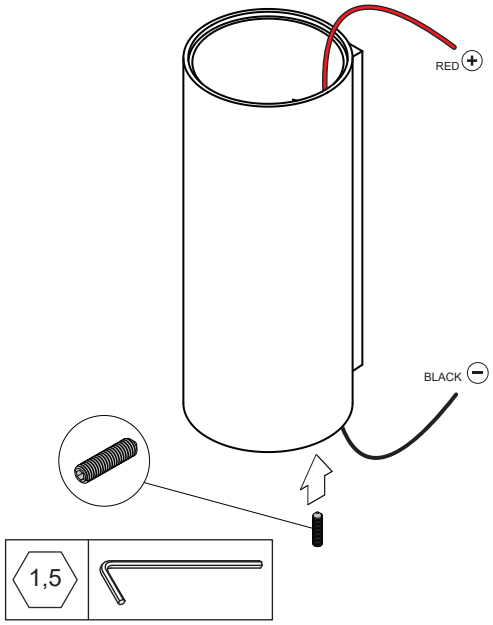

⚠	The light source contained in this luminaire shall only be replaced by the manufacturer or his service agent or a similar qualified person
⚠	Always use a Smart IP55 rated fixture in the uplight position
⚠	Do not use the tube in a shower as wall application

FOR IP20, USE ONLY WITH :
- Smart 48 LED GE

FOR IP55, USE ONLY WITH :
- Smart 48 IP55 LED GE

04 - 07/10/2021