PISTA TRACK 48V Up/Down

123600XX_123601XX_123602XX

PISTA COMPONENTS

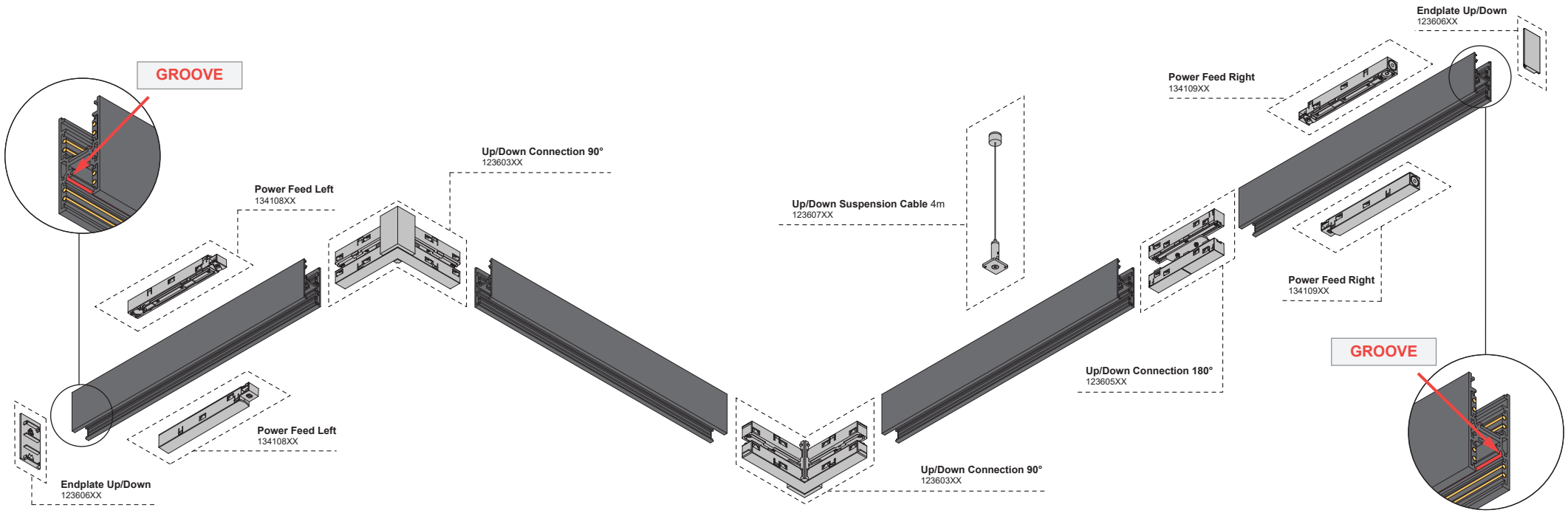

ELECTRICAL & DIMENSIONS

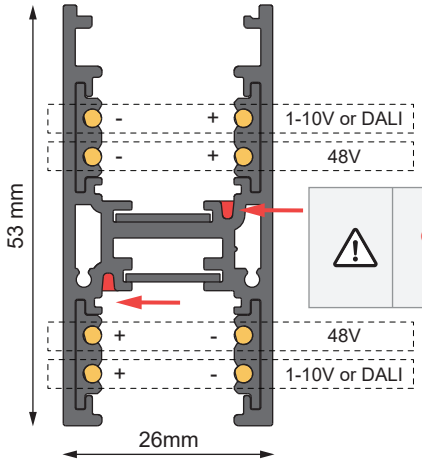

WARNING
GROOVE should always be on same side.
Check Power Feed manual

SHORTEN PROFILE

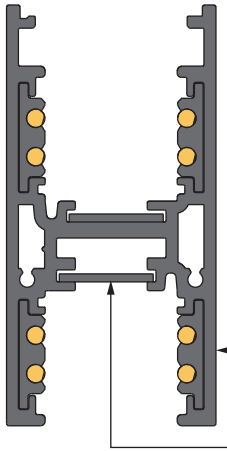

MAXIMUM LOAD & NUMBER OF FIXATION POINTS

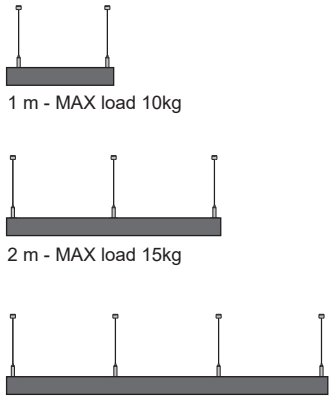

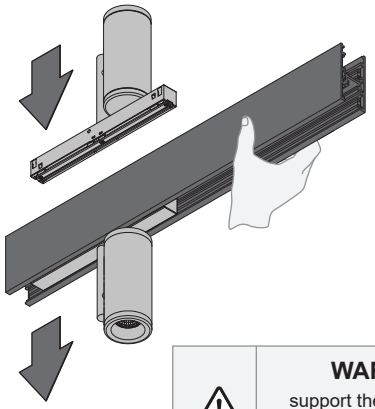

WARNING
support the track when clicking in and pulling out fixtures

48V III 1-10V DALI IP 20