Chapeau TRIMLESS 1xLED GE

119701XX_119704XX

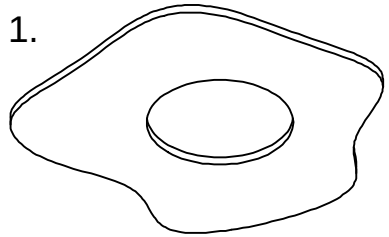

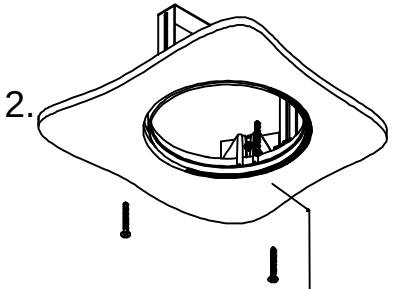

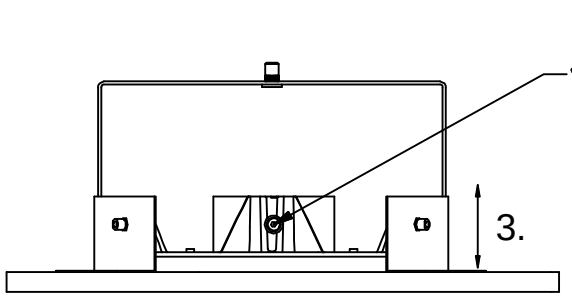

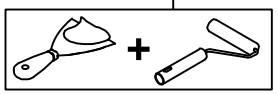

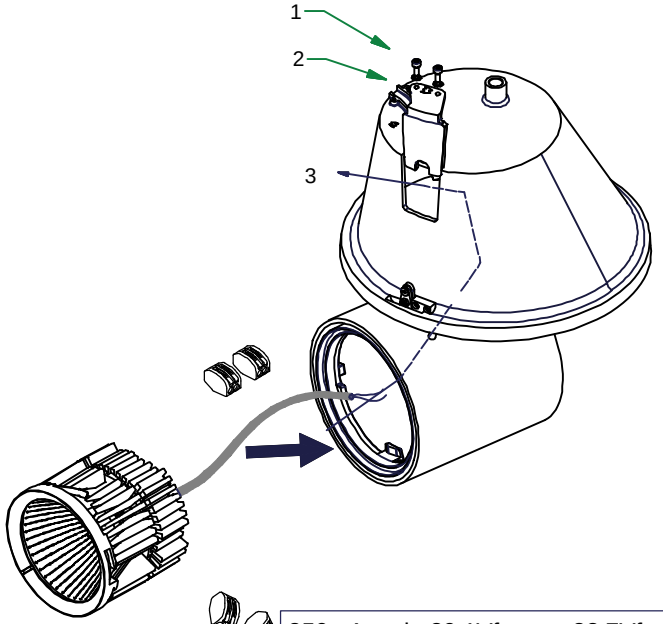

350mA - min 29,1Vf - max 33,7Vf - 11W
500mA - min 29,9Vf - max 34,7Vf - 16,2W

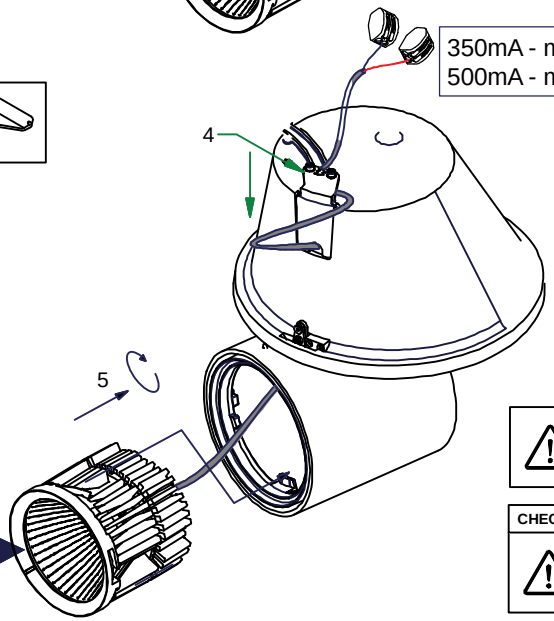

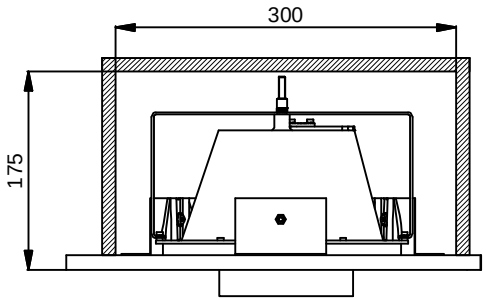

The light source contained in this luminaire shall only be replaced by the manufacturer or his service agent or a similar qualified person

CHECK DIP-SWITCHES ON DRIVER

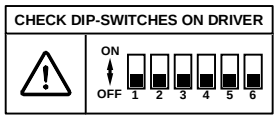

Dimming diagrams for LED

PUSH DIM - DOUBLE DIM CHANNEL

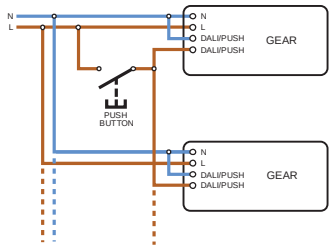

always respect neutral and line

1-10V

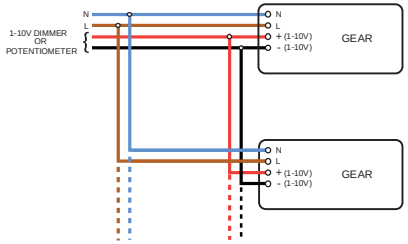

always respect polarity of 1-10V signal

DALI

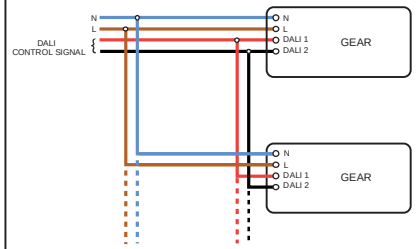

needs programming or use to be touched DALI

CAN BE USED WITH
Drivers:
see driver matrix - latest version on website
www.supermodular.com or check sales contact

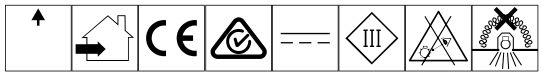

V1 - 18/05/2016