PISTA TRACK 48V Up/Down

123600XX_123601XX_123602XX

PISTA COMPONENTS

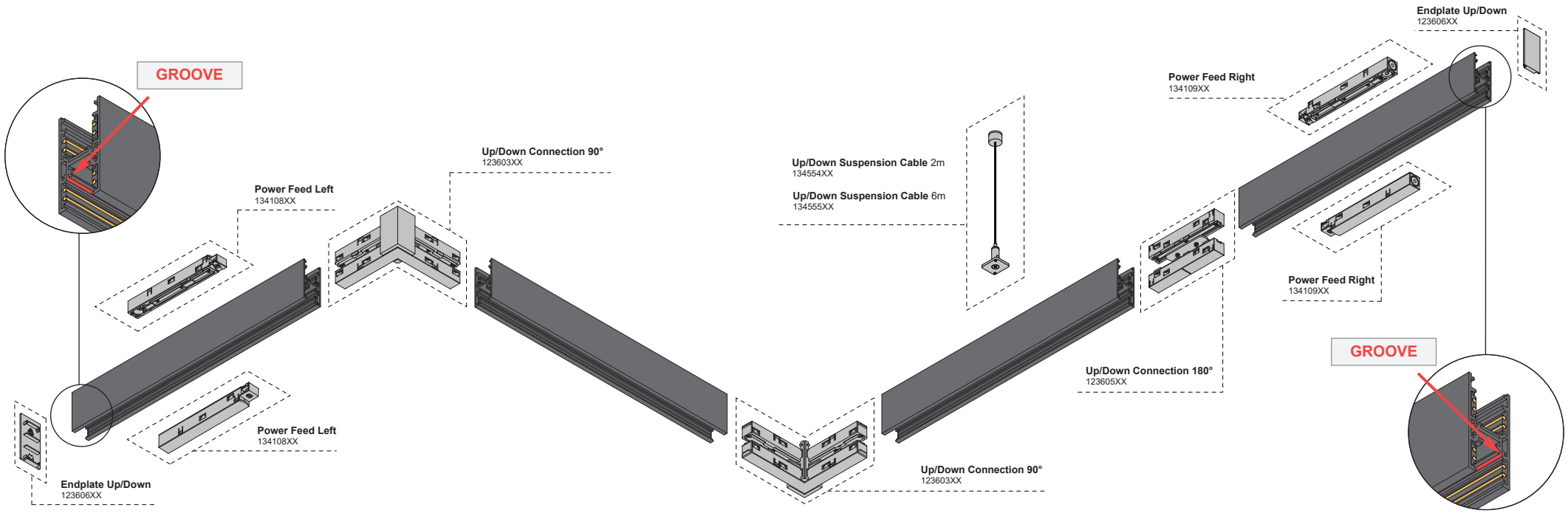

ELECTRICAL & DIMENSIONS

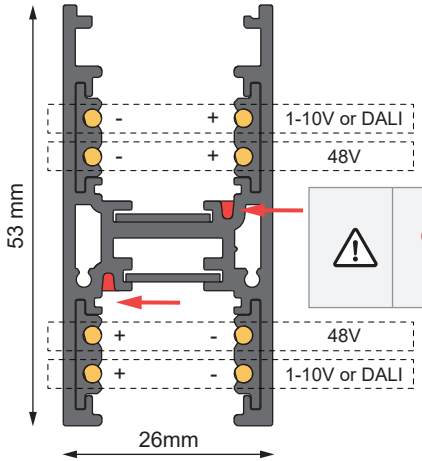

WARNING
GROOVE should always be on same side.
Check Power Feed manual

SHORTEN PROFILE

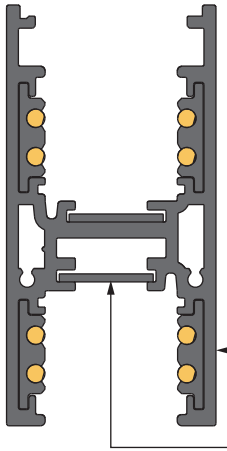

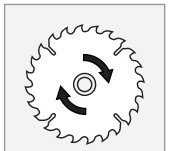

MAXIMUM LOAD & NUMBER OF FIXATION POINTS

0 - 2m / MAX load 10kg

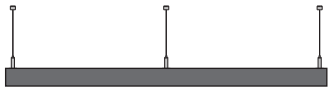

2 - 3m / MAX load 20kg

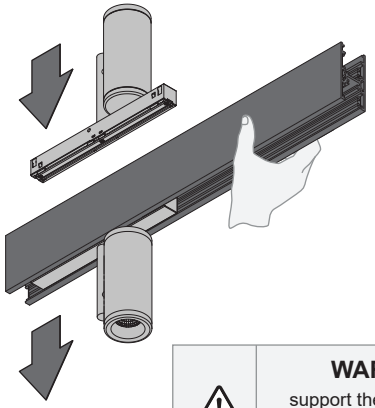

WARNING
support the track when clicking in and pulling out fixtures

03 - 12/06/2024

48V III 1-10V DALI IP 20