PISTA TRACK 48V PROFILE HIGH

134556XX_134557XX_134558XX

PISTA COMPONENTS

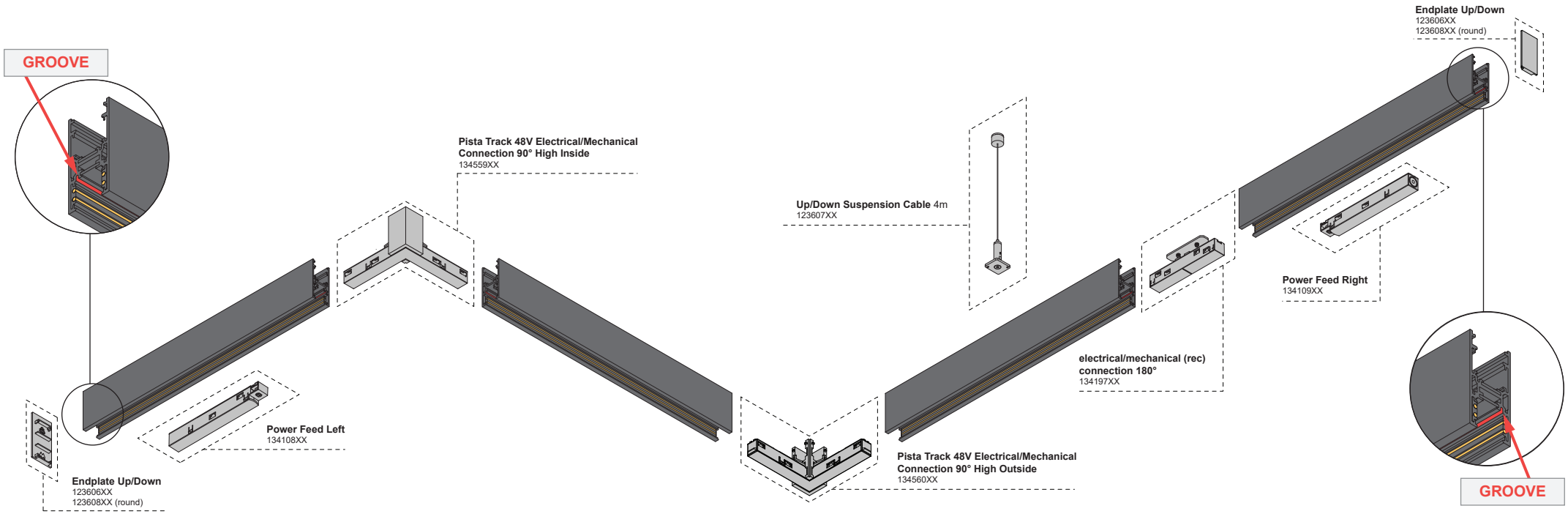

ELECTRICAL & DIMENSIONS

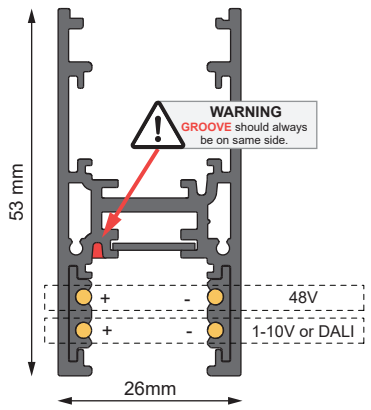

SHORTEN PROFILE

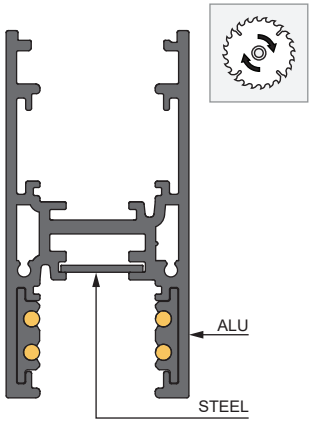

SURFACE PROFILE

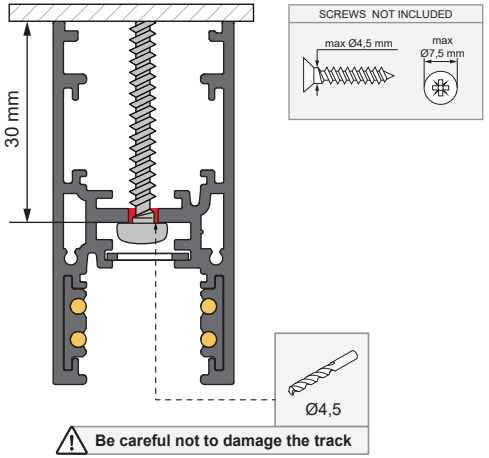

MAXIMUM LOAD & NUMBER OF FIXATION POINTS

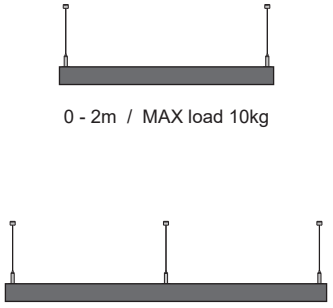

0 - 2m / MAX load 10kg

2 - 3m / MAX load 20kg

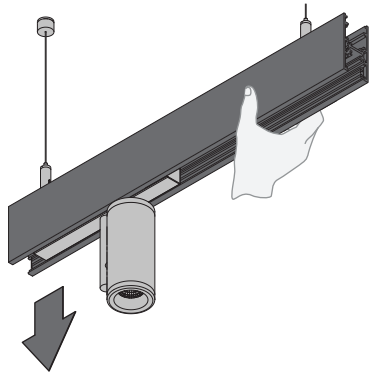

WARNING
support the track when clicking in and pulling out fixtures

02 - 03/05/2024

48V III 1-10V DALI IP 20