MODULAR LIGHTING INSTRUMENTS
— by MLI NA Corporation

Project	
Type	
Contact	

Smart Cake Box Surface 4.5

Overview

Smart Cake is part of the Smart family. This family's styling is based on our most popular iconic designs. Its gently sloping sides ensure a soft distribution of light.

With an outer diameter of 4.5" and an aperture of 4.5 inches (fixed version) or 3.3 inches (adjustable version), the Smart Cake 4.5 is compact yet powerful. Combined with a surface box that is offered in 1X and 2X and multiple finishes, the beautiful combinations are yours to discover.

How to Specify (example)

1. Select Lamp Unit → Page 2

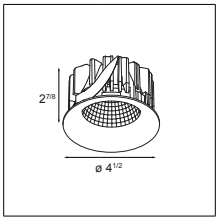

Example: **SMART-C-R-4.5-1X-MG-30F-DP-DE-WHS**
Smart Cake 4.5, fix version, microprismatic glass, 3000K, flood, damp rated, white structure

2. Select Box → Page 3

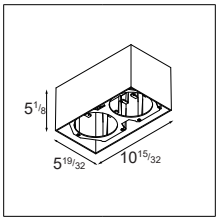

Example: **SMARX-S-4.5-2X-010P-DI-500-WHS**
Box Surface 4.5, 2 lamp version, 0-10V, ELV & Triac driver included, 500mA, white structure

3. Select Mask → Page 4

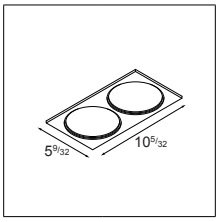

Example: **SMART-M-4.5-2X-WHS**
Mask 4.5, 2 lamp version, white structure

Example order:

Quantity	Item
2	**SMART-C-R-4.5-1X-MG-30F-DP-DE-WHS**
1	**SMARX-S-4.5-2X-010P-DI-500-WHS**
1	**SMART-M-4.5-2X-WHS**

clear form

MLI NA Corporation reserves the right to alter material, dimensions and characteristics without prior notice. Lighting technology changes rapidly. Latest datasheet and documentation available on www.supermodular.com
07 - 25/10/2023 - © MLI NA Corporation

MODULAR LIGHTING INSTRUMENTS
— by MLI NA Corporation

Smart Cake Box Surface 4.5

Lamp Specifications

- Aperture: 4.5” (fix version), 3.3” (adjustable version)
- Adjustability: 0-25° (adjustable version only)
- Trim material: cast aluminum
- Trim finish: powder coat or wet paint
- Must be combined with Box and Mask

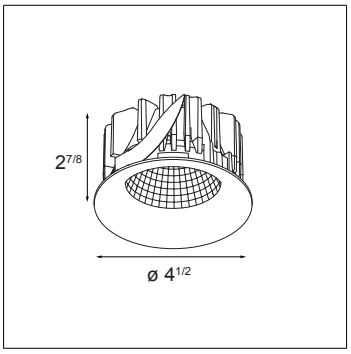

Smart Cake 4.5 (fix version)

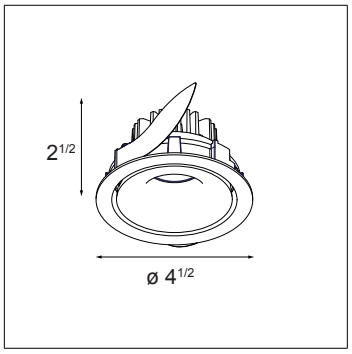

Smart Cake Adjustable 4.5 (adjustable version)

Finish Information

Black Structure (BLS)
Powder Coat (Matte)

White Structure (WHS)
Powder Coat (Matte)

Gold (GOMT)
Wet Paint (Matte)

Ordering Information

SMART-C-R-4.5-1X	-		-			-	DP	-	DE	-	
SMART-C-R-4.5-1X Smart Cake 4.5 (fix version)		**MG** Microprismatic Glass **FG** Frosted Glass [1]		**27** 2700K **30** 3000K **35** 3500K	**F** Flood (41°) [2] **M** Medium (25°) **S** Spot (17°)		**DP** Damp Location				**BLS** Black Structure **WHS** White Structure **GOMT** Gold Matte

SMART-C-R-A-4.5-1X	-		-			-	DP	-	DE	-	
SMART-C-R-A-4.5-1X Smart Cake Adjustable 4.5 (adjustable version) [3]				**27** 2700K **30** 3000K **35** 3500K	**F** Flood (39°) **M** Medium (25°) **S** Spot (13°)		**DP** Damp Location				**BLS** Black Structure **WHS** White Structure **GOMT** Gold Matte

(1) Frosted Glass can only be combined with a Flood beam angle
(2) Frosted Glass version: 37°
(3) Adjustable version is always provided without a Glass

clear form

MLI NA Corporation reserves the right to alter material, dimensions and characteristics without prior notice. Lighting technology changes rapidly. Latest datasheet and documentation available on www.supermodular.com
07 - 25/10/2023 - © MLI NA Corporation

Smart Cake Box Surface 4.5

Box Specifications

- Box material: cast aluminum
- Box finish: powder coat
- Driver: included in the box
- Suitable for 1 lamp unit (1X versions) or 2 lamp units (2X versions)
- Box completely covers a 4”x4” octagonal junction box (no covers needed)
- Must be combined with Mask (specify on the next page)
- Weight: 2.8lbs (1X versions), 4.5lbs (2X versions)

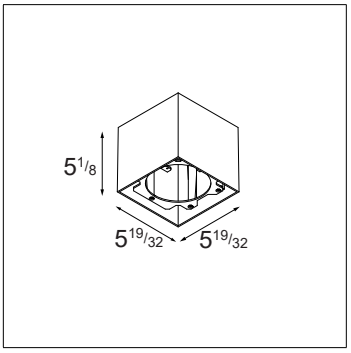

Box Surface 4.5 1X

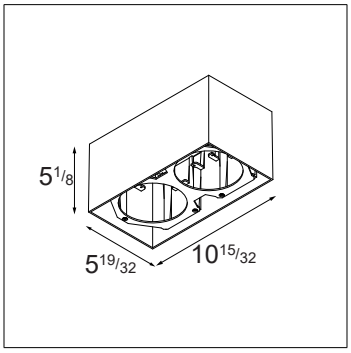

Box Surface 4.5 2X

Finish Information

Black Structure (BLS)
Powder Coat (Matte)

White Structure (WHS)
Powder Coat (Matte)

Box Specifications & Ordering Information

Ordering Code	Version	Finish	Input	Output	Dim [6]	Connected Load
Fix [4]						
SMARX-S-4.5-1X-010P-DI-500-BLS	Box Surface 4.5 1X	Black Structure	120-277VAC [5]	500mA DC	0-10V, ELV & Triac - 1%	19.1W
SMARX-S-4.5-1X-010P-DI-500-WHS	Box Surface 4.5 1X	White Structure	120-277VAC [5]	500mA DC	0-10V, ELV & Triac - 1%	19.1W
SMARX-S-4.5-2X-010P-DI-500-BLS	Box Surface 4.5 2X	Black Structure	120-277VAC [5]	500mA DC	0-10V, ELV & Triac - 1%	38.2W
SMARX-S-4.5-2X-010P-DI-500-WHS	Box Surface 4.5 2X	White Structure	120-277VAC [5]	500mA DC	0-10V, ELV & Triac - 1%	38.2W
Adjustable [4]						
SMARX-S-A-4.5-1X-010P-DI-500-BLS	Box Surface 4.5 1X	Black Structure	120-277VAC [5]	500mA DC	0-10V, ELV & Triac - 1%	10.5W
SMARX-S-A-4.5-1X-010P-DI-500-WHS	Box Surface 4.5 1X	White Structure	120-277VAC [5]	500mA DC	0-10V, ELV & Triac - 1%	10.5W
SMARX-S-A-4.5-2X-010P-DI-500-BLS	Box Surface 4.5 2X	Black Structure	120-277VAC [5]	500mA DC	0-10V, ELV & Triac - 1%	21.5W
SMARX-S-A-4.5-2X-010P-DI-500-WHS	Box Surface 4.5 2X	White Structure	120-277VAC [5]	500mA DC	0-10V, ELV & Triac - 1%	21.5W

(4) Version must match Lamp version (page 2)
(5) Dimming via ELV & Triac only compatible at 120VAC input
(6) Consult the factory for dimmer compatibility

clear form

MLI NA Corporation reserves the right to alter material, dimensions and characteristics without prior notice. Lighting technology changes rapidly. Latest datasheet and documentation available on www.supermodular.com
07 - 25/10/2023 - © MLI NA Corporation

Mask Specifications

- Mask material: cast aluminum
- Mask finish: powder coat or wet paint
- Mask thickness: 0.2”
- Weight: 0.3lbs (1X version), 0.4lbs (2X version)

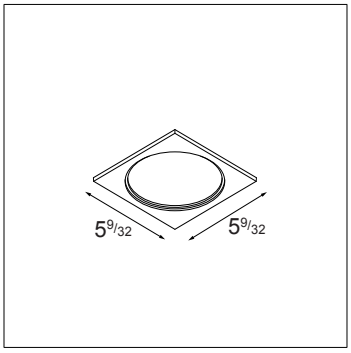

Mask 4.5 1X

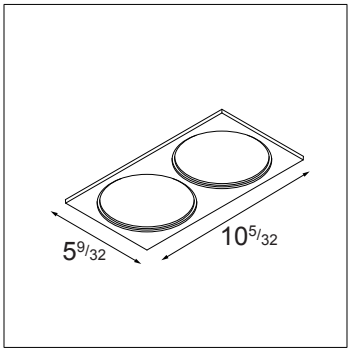

Mask 4.5 2X

Finish Information

Black Structure (BLS)
Powder Coat (Matte)

White Structure (WHS)
Powder Coat (Matte)

Gold (GOMT)
Wet Paint (Matte)

Ordering Information

SMART-M-4.5	-		-	

SMART-M-4.5	Mask 4.5	**1X**	For 1 lamp unit [7]	**BLS**	Black Structure
		2X	For 2 lamp units [7]	**WHS**	White Structure
				GOMT	Gold Matte

[7] Size must match Box size (page 3)

clear form

MLI NA Corporation reserves the right to alter material, dimensions and characteristics without prior notice. Lighting technology changes rapidly. Latest datasheet and documentation available on www.supermodular.com
07 - 25/10/2023 - © MLI NA Corporation

MODULAR LIGHTING INSTRUMENTS
— by MLI NA Corporation

Smart Cake Box Surface 4.5

Performance Specifications (per lamp unit)

Lamp Unit	**Fix**	**Adjustable**
Weight	1.3lbs	1.0lbs
Adjustability	-	0-25°
Location	damp	damp
CRI*	92, R9: 71	92, R9: 71
Lifetime	L80 B20 @ 50.000 hrs	L80 B20 @ 50.000 hrs
UGR	see website	see website

Electrical (typical)	**Fix**	**Adjustable**
Drive Current (mA DC)	500	500
Forward Voltage (V)	31.3	14.4
LED Power (W)	15.7	7.2

* CRI & TM-30 Value for 3000K

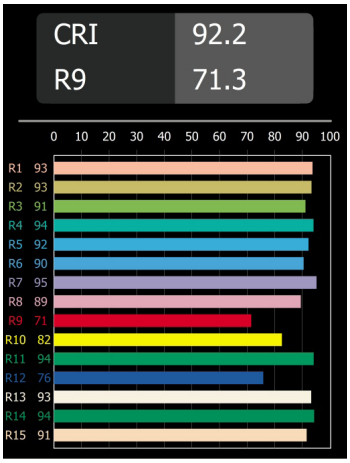

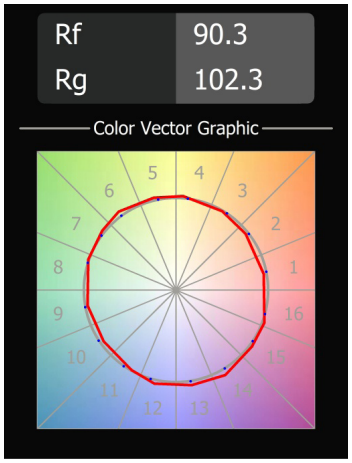

For photometric files see website or contact factory.

Output Specifications (per lamp unit)

Reference Delivered Lumens	CCT	Optics	Drive Current	Finish
Fix				
1594 (ref. 3000K, MG F, 500mA WHS)	2700K (0.95) 3000K (1.00) 3500K (1.07)	MG F (1.00) MG M (1.04) MG S (1.04) FG F (0.91)	500mA (1.00)	BLS (0.87) WHS (1.00) GOMT (0.93)
Adjustable				
618 (ref. 3000K, F, 500mA WHS)	2700K (0.96) 3000K (1.00) 3500K (1.04)	F (1.00) M (1.06) S (1.13)	500mA (1.00)	BLS (0.75) WHS (1.00) GOMT (0.91)

Multipliers are indicated between brackets: ( )
Example calculation, to determine typical output for Fix, 2700K, Microprismatic Glass, Medium, 500mA Black Structure: 1594 x (0.95) x (1.04) x (1.00) x (0.87) = 1370 lumens

Listings and Certifications

- Listed: cULus
- Damp locations

Warranty

- Visit https://www.supermodular.com/en-us/warranty/

clear form

MLI NA Corporation reserves the right to alter material, dimensions and characteristics without prior notice. Lighting technology changes rapidly. Latest datasheet and documentation available on www.supermodular.com
07 - 25/10/2023 - © MLI NA Corporation