Pista surface mounted LED power supply 48V (for suspended installation)

US_134121XX_US_134123XX_US_134185XX

1

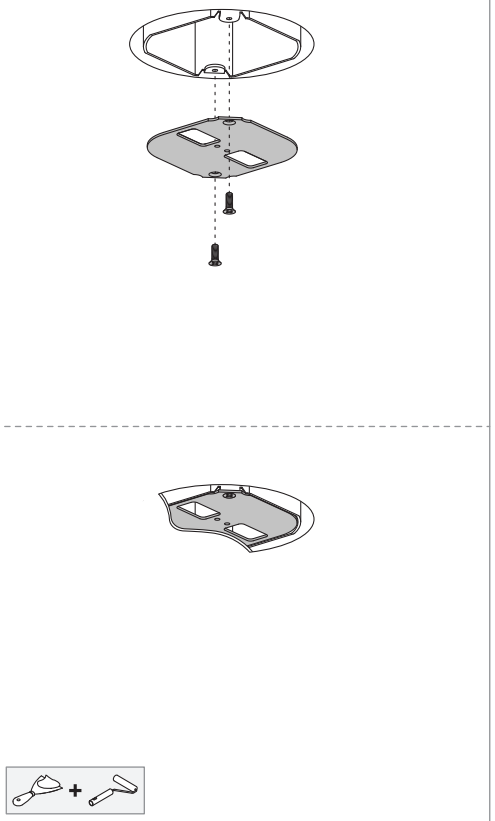

2

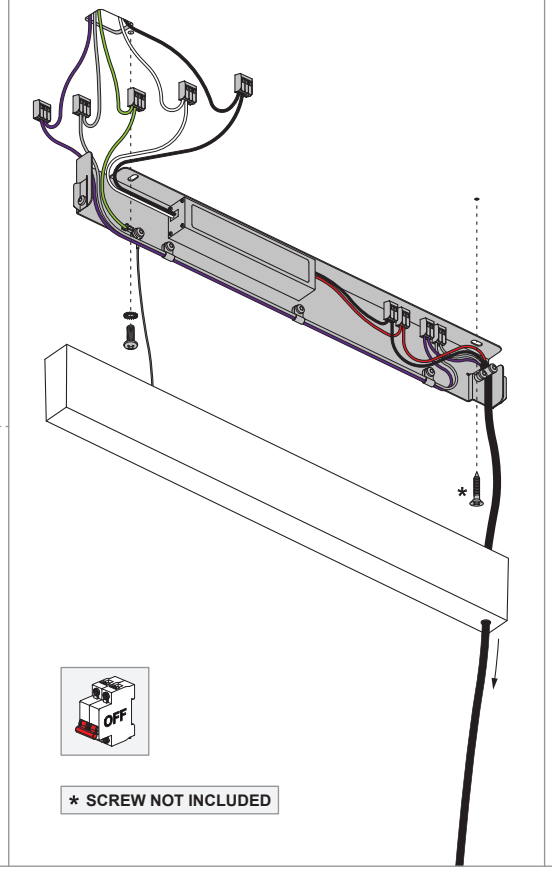

* SCREW NOT INCLUDED

3

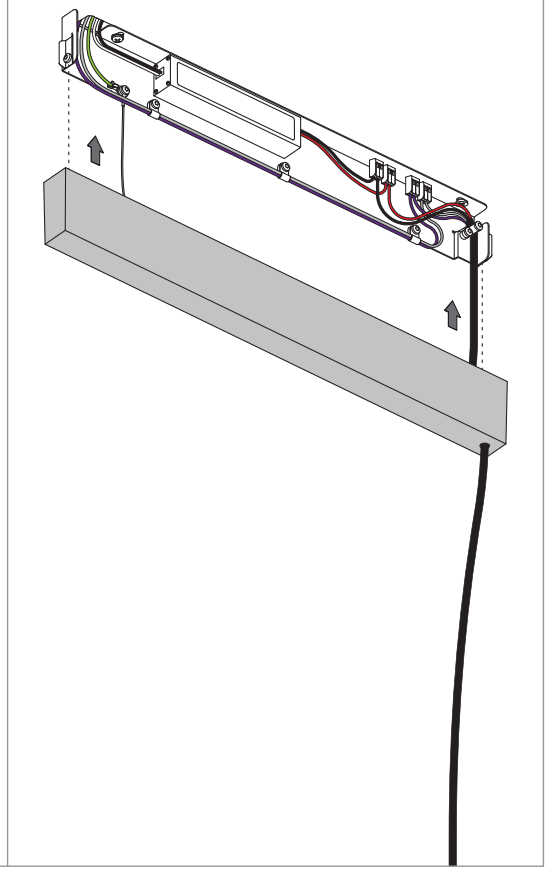

ELECTRICAL CONNECTION

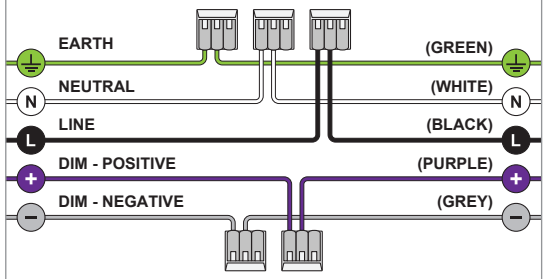

PRIMARY, INPUT: 120/277V AC, 50/60Hz

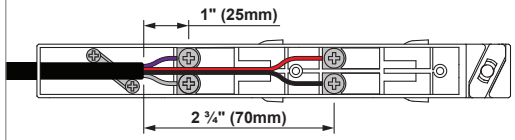

- V+ 48V DC - POSITIVE (RED)
- V- 48V DC - NEGATIVE (BLACK)
- D+ DIM - POSITIVE (PURPLE)
- D- DIM - NEGATIVE (GREY)

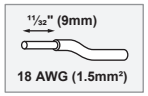

SECONDARY CONNECTION WITH PISTA POWER FEED

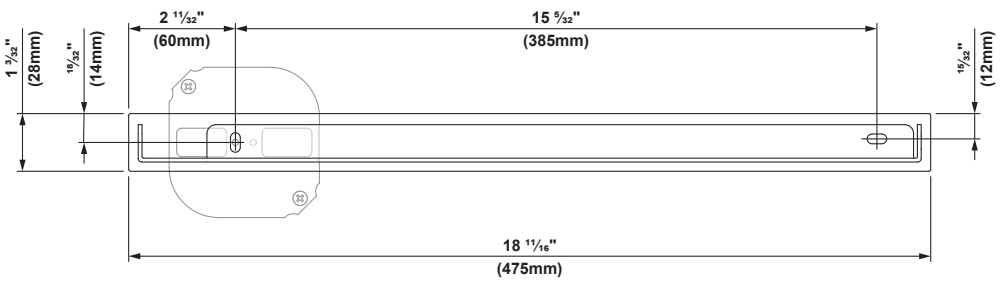

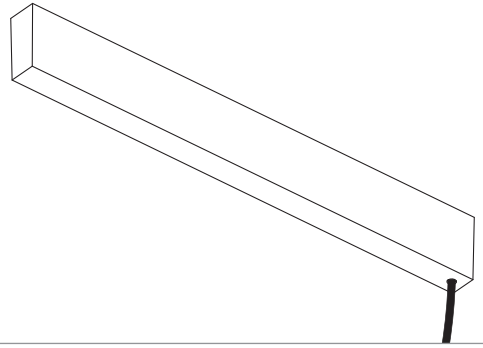

INSTALLATION INSTRUCTION (POWER SUPPLY)

- Read all instructions.
- Save these instructions.

BASIC SAFETY PRECAUTIONS

- Suitable for damp locations.
- Min. 90°C supply conductors.

PREVENTING ELECTROSTATIC DAMAGE

ESD

A discharge of static electricity may damage sensitive components. Therefore do not touch the LED nor the stripped parts of the wires with bare hands. Always be properly insulated by using ESD gloves.

CAN BE COMBINED WITH (NOT INCLUDED)

- Pista Track 48V Power Feed

LUMINAIRES & ACCESSORIES

For latest version of all available luminaires and accessories, check www.supermodular.com or connect with your sales contact.

07 - 27/11/2022

CERTIFIED